ROHS compliant

REV	DESCRIPTION	ECN NO.	DATE
A0	原始图档		2011.03.09

NOTES:
1.MATERIAL:
HOUSING:NY66 UL 94 V-2
COLOR:TRANSPARENT
CONTACT:BRASS C2680H
2.FINISH:
CONTACT:100u" MIN.TIN PLATING ON SOLDERTAILS
50u" MIN.NICKEL UNDERPLATING OVER ALL
MARKING DIMENSION MUST BE CONTROL BY QC

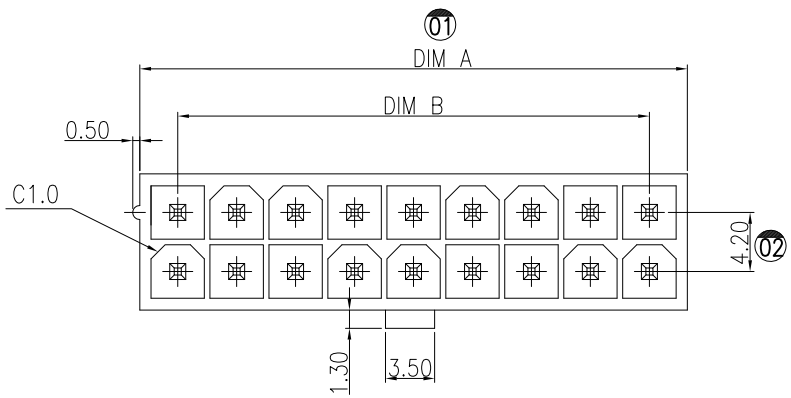

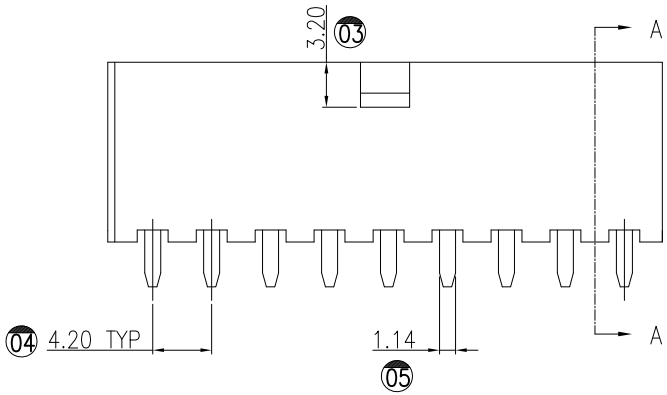

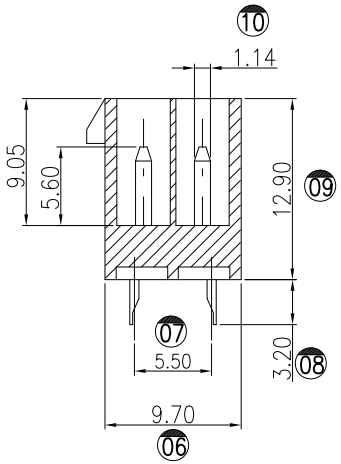

SECTION A-A

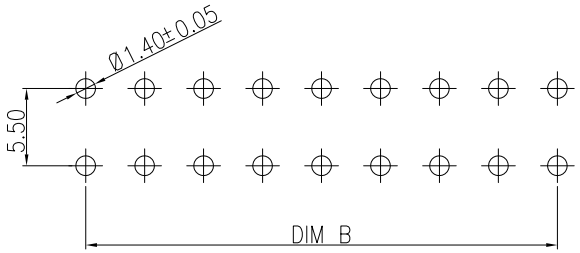

RECOMMENDED PC BOARD LAYOUT

Ordering Information:

AXXXA - 2 0 X X C X - X

- PIN NO: 02P~24P ...
- Housing Matermail: D:NY46 F:NY66 ...
- Housing Color: T:Transparent ...
- Contact Area Plating: 2:50u" NI 100u SN ...
- Packing: T:Tray...

PART NO	PIN NO	DIM A	DIM B
AX02A-20XXCX-X	02P	5.40	0.00
AX04A-20XXCX-X	04P	9.60	4.20
AX06A-20XXCX-X	06P	13.80	8.40
AX08A-20XXCX-X	08P	18.00	12.60
AX10A-20XXCX-X	10P	22.20	16.80
AX12A-20XXCX-X	12P	26.40	21.00
AX14A-20XXCX-X	14P	30.60	25.20
AX16A-20XXCX-X	16P	34.80	29.40
AX18A-20XXCX-X	18P	39.00	33.60
AX20A-20XXCX-X	20P	43.20	37.80
AX22A-20XXCX-X	22P	47.40	42.00
AX24A-20XXCX-X	24P	51.60	46.20

GENERAL TOLERANCES (UNLESS SPECIFIED)	
	MM
.X	±0.25
.XX	±0.15
.XXX	±0.05
ANGULAR ±3°	
DRAFT WHERE APPLICABLE MUST REMAIN WITHIN DIMENSIONS	

SCALE: 1:1	NUMBER:	
DESIGN BY 洪家亮	DATE 2011.03.09	
DRAWN BY 洪家亮	DATE 2011.03.09	
CHECKED BY	DATE	
APPROVED BY	DATE	

深圳市瀚云通科技有限公司
SHENZHEN HANYUNTONG TECHNOLOGY LIMITED

NAME: ATX POWER 180度透明无柱空心PIN

THIRD ANGLE PROJECTION | REVISE ON CAD ONLY

PART NO.	DWG NO.	SHEET NO.
AXXXA-20XXCX-X	AX-0020-1	1/1

THIS DRAWING CONTAINS INFORMATION THAT IS PROPRIETAPY TO CYBERAPEX INCORPORATED AND SHOULD NOT BE USED WITHOUT WRITTEN PERMISSION

A4