REV	DESCRIPTION	ECN NO.	DATE
A0	原始图档		12.03.31

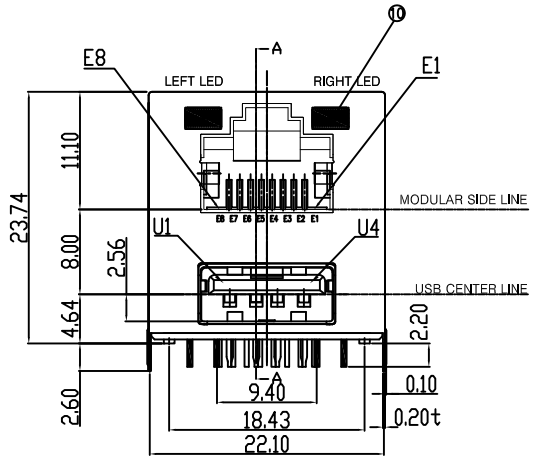

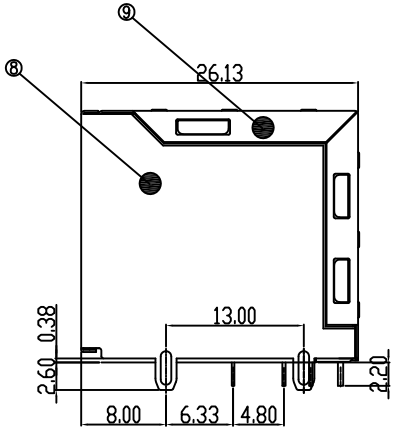

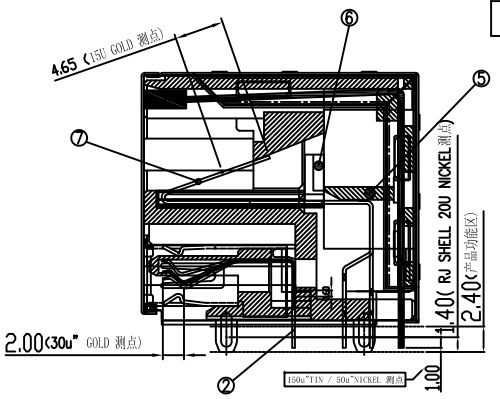

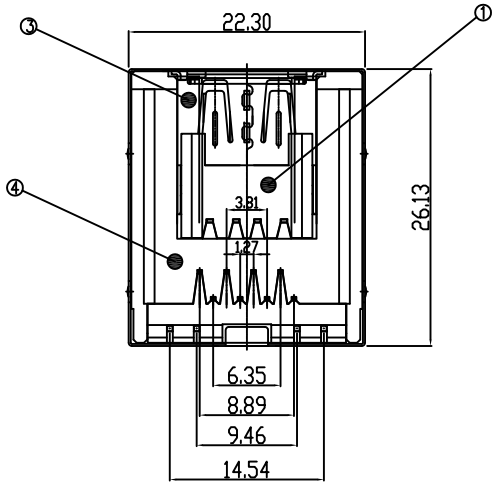

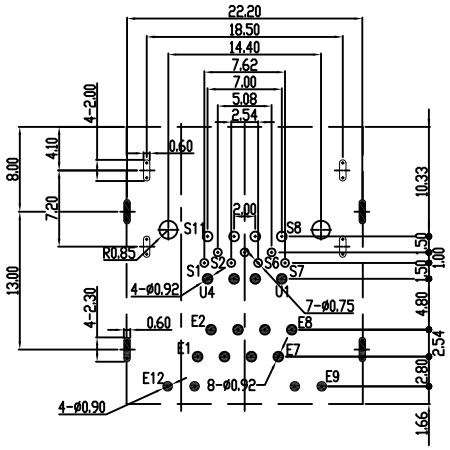

● RECOMMEND PCB LAYOUT

PIN DEFINITION

USB		ETHERNET(RJ45)	
PIN No.	PIN NAME	PIN No.	PIN NAME
U1	VBUS	E1	Tx+
U2	D−	E2	Tx−
U3	D+	E3	Rx+
U4	GND	E4	Txc
		E5	Txc
		E6	Rx−
		E7	Rxc
		E8	NC
		E9	Left LED+
		E10	Left LED−
		E11	Right LED+
		E12	Right LED−

● REMARK : Recomendable PCB Thickness
t = 1.20mm, 1.60mm.

Ordering Information:

UB16B-86 X X X X - X -X - XX

- Housing Matermail: A:LCP ...
- Housing Color: K:BLACK ...
- PLATING TYPE B:GOLD/TIN
- PLATING THICKNESS 5:15μ" 6:30μ" 7:Gold Flash ...
- L:No Halogen N/A:ROHS
- Packing: T:Tray ...
- MO:HY140 N/A:未指定

NO.	NAME	MATERIAL	Q'TY	STANDARD	NOTE
10	LED	EPOXY	2	——	LEFT:ORANGE,RIGHT:GREEN
9	RJ45 BOTTOM SHIELD	STAINLESS STEEL	1	NON-PLATING	SUS304x0.20t
8	RJ45 TOP SHIELD	STAINLESS STEEL	1	Min. Ni 20u"	SUS304x0.20t
7	RJ45 CONTACT	PHOSPHOR BRONZE	8	Underplate:Min.Ni50u"., Mating area:Min.Au15U" Solder Tails:Min 150u" bright tin	C5210x0.30t
6	RJ45 STOPPER	LCP GF30%	1	UL94V-0	BLACK
5	RJ45 COVER	LCP GF30%	1	UL94V-0	BLACK
4	RJ45 HOHSING	LCP GF30%	1	UL94V-0	BLACK
3	USB SHIELD	BRASS	1	Min. Ni 50u"	C2680x0.30t
2	USB CONTACT	BRASS	4	Underplate:Min.Ni50u"., Mating area:Min.Au30U" Solder Tails:Min 150u" bright tin	C2680x0.25t
1	USB HOUSING	LCP GF30%	1	UL94V-0	BLACK

GENERAL TOLERANCES (UNLESS SPECIFIED)	
	MM
.X	±0.38
.XX	±0.25
.XXX	±0.13
ANGULAR ±3°	
DRAFT WHERE APPLICABLE MUST REMAIN WITHIN DIMENSIONS	

SCALE: 1:1 | NUMBER:
MATERAIL: | HRC:
DRAWN BY John DATE 12.03.31
CHECKED BY DATE
APPROVED BY DATE

深圳市瀚云通科技有限公司
SHENZHEN HANYUNTONG TECHNOLOGY LIMITED

NAME: RJ+USB2.0 90度DIP TYPE 带LED

THIRD ANGLE PROJECTION | REVISE ON CAD ONLY

PART NO. UB16B-86XXXX-X-X-XX | DWG NO. UB-86-0 | SHEET NO. 1/1

THIS DRAWING CONTAINS INFORMATION THAT IS PROPRIETAPY TO CYBERAPEX INCORPORATED AND SHOULD NOT BE USED WITHOUT WRITTEN PERMISSION

A4